RAJO

Somali Strengthening Institutions for Public Works
Presents
Project Rajo

How to Conduct a Training Course for Construction Workers

Notes for facilitators and trainers

BANQUE AFRICAINE DE DEVELOPPEMENT
AFRICAN DEVELOPMENT BANK

UNOPS

UN HABITAT
FOR A BETTER URBAN FUTURE

First published in Nairobi in 2012 by UN-Habitat.
Revised in Nairobi in 2018 by UN-Habitat.
Revised by: Yasir Qadri
Project funded by: Africa Development Bank
UN-Habitat project team: Sharmaarke Abdullahi, Rhoda Omenya, Lei Guo
Design revised by: Mutisya Emmanuel Sleek NGUI

UN-Habitat Youth and Somalia Programme
Tel. +254 20 7625030
www.unhabitat.org

HS/073/12E
ISBN: 978-92-1-132488-4

For more information on the RAJO project, please contact:
Sharmaarke Abdullahi
sharmaarke.abdullahi@un.org

How to Conduct a Training Course for Construction Workers

Notes for facilitators and trainers

November, 2018

Table of Contents

List of Annexes

About the course

This training course covers the principles of good building construction. The basis for the course is the construction manual *A Practical Field Guide to Building Construction*, developed under the EU-funded project Sustainable Employment Creation and Improved Urban Livelihoods for Vulnerable Urban Communities in Mogadishu (SECIL). These notes for facilitators and trainers are meant to guide trainers in the implementation of the course.

Time frame

The training has been designed for nine half-days, each half-day consisting of four hours, except Training Day 3, which is six hours. The nine half-days can be conducted in two weeks or spread over a longer period, depending on the availability of participants. However, it is recommended to have at least one session per week and not to spread the training course over more than nine weeks, as there will otherwise be the risk that participants forget what they have learned between classes.

Note: Adjust your course design to the needs and availability of participants. Choose the time most suitable for learning. Supervisors must release workers for training purposes.

Target group

The target group for the nine half-day training course is construction workers.

Note: Be prepared to have participants with very different training backgrounds and work experience. Some of the construction workers might even be illiterate. Start with what they have in common: they are all practitioners! Relate to their world, and do not be too academic! Get to know your group and what you can expect from them. Understand their interests and respond to them. And last but not least: be funny!

Classes should not have more than 16 participants at the time in order to allow for the appropriate implementation of the practical exercises.

Course objectives

The objectives of the nine half-day training course are as follows:

- Upgrade the construction skills of construction workers
- Demonstrate and increase the application of standard construction procedures and practices
- Improve the quality of building construction in Somalia

Note: Have realistic objectives. This course cannot replace a vocational training course or engineering studies.

Expected outcomes

At the end of the nine half-day construction course, the participants are expected to have the following:

- Improved construction skills and a better understanding of construction work procedures
- An ability to apply their newly acquired skills to improve the quality delivery of their current and future construction projects

Teaching/training methods

Facilitators/trainers need to identify the most appropriate teaching methodology prior to conducting the training course. It is therefore advisable to gather information on the training participants beforehand, looking at literacy, educational background, years of experience, etc. On that basis, decisions on the suitability of training methods and tools have to be made. For example, are participants used to upfront teaching in a classroom? Are PowerPoint presentations the right tool to deliver messages? How long can you expect participants to sit and listen only? It is advisable to engage participants as much as possible, to let them share their experiences and views, and to include as many practical exercises as possible. Further, a combination of teaching methods (upfront teaching, visuals, group discussions, practical exercises, on-site observations, etc.) is expected to be most promising. This is because of the following:

- Participants are made up of different learning types: some learn best if they see something (visual learners) and others if they hear it (auditory learners), while others learn best through discussions (communicative learners) and practical exercises (kinesthetic learners).
- People on average remember 20 percent of what they have been taught if they only hear it and 30 percent if they only see it, but 50 percent if they hear AND see it. If discussions are included as a teaching method, people remember up to 70 percent (see, hear, AND communicate), and if they also do something themselves the learning goes up to 90 percent (see, hear, discuss, AND do).

Note: Change your teaching method frequently or combine different methods in order not to lose the attention of certain members of the audience (learning types not responding to your teaching method). For instance, if visual learners have to listen to a lecture without any visuals for more than five minutes, their mind will go somewhere else and you risk the training content not reaching them.

Training venue

As the training modules consist of classroom teaching and practical exercises, each module has different training venue requirements. In principle, the training course at different times needs two types of venue:

- Classroom with attached courtyard, garden, etc. for small practical exercises (loose soil, not asphalt!)
- Construction site on which practical exercises can be conducted, as well as construction sites with special requirements:
    1. Site where different types of concrete can be shown, such as mass or unreinforced concrete, reinforced concrete, as well as high-, medium-, and low-strength concrete
    2. Site where building services are being installed
    3. Site in the final construction stage where good finishes and snag lists can be explained

Note: As the location of the classes changes frequently, it must be made very clear to the participants where the next class wil take place. The training venue must be easily accessible by all training participants, and it has to be ensured that everybody will arrive on time. It might be necessary to always meet at the same place and travel to the training venue together.

Closing

At the end of the training, each participant who has participated in at least seven of the ten training days will receive a certificate. It is recommended to invite a government official or other professional (professor, etc.) to hand over the training certificates and close the training.

Overview of the course

Training Day	Module		Synopsis	Venue
1	A	General introduction and participants' expectations	During this session, participants will introduce themselves and state their expectations of the training. The main facilitator will present the course objectives and the training outline.	Classroom
	B	Definition of a building and its key components	This session focuses on the definition of a building and its key components.	Classroom
2	C	Building materials	This session covers in detail the different building materials, their quality requirements, and basic field tests that can be conducted to verify their quality.	Construction site
3	D	Concrete technology (longer session!)	This session explains what concrete is, introduces the different types of concrete, and describes how to treat concrete to achieve high strength and quality.	Construction site
4	E	On-site construction activities I	This session focuses on safety at a building construction site, preliminary construction activities, and how to set out a building.	Classroom
5	F	On-site construction activities II	This session explains how to stake and lay foundations, solid ground floors, and suspended upper floors. It includes a practical exercise on how to lay blocks to build strong and stable walls.	Construction site
6	G	On-site construction activities III	This session describes how to make safe scaffolds and ladders, as well as how to make formworks and do steel bar bending for steel reinforcement cages.	Construction site
7	H	Building services	This module covers the main services required in a building, such as plumbing, water supply, drainage, and electrical services.	Construction site with building services
8	I	Building finishes	This session focuses on the application of basic finishes to a building, such as plastering, pointing, and painting, as well as on clearing and tidying the construction site and making final touches before handing over the building to the client.	Construction site in final stage
9	J	Summary of training course, assessment of learning objectives, and training evaluation	The last session covers a summary of the content of the training course, a basic quiz on the key course topics to assess whether the learning objectives have been met, as well as an evaluation.	Classroom

Day 1/Module A & B: Introduction

Two modules are covered during the first day.

These are Module A: General introduction and expectations and Module B: Definition of a building and its components.

Training day	Module		Venue	Time frame	Materials needed
1	A	General introduction and participants' expectations	Classroom	1 hour	Flipchart and markers
	B	Definition of a building and its key components	Classroom	3 hours	Flipchart and markers, pictures of different building types (enlarged and laminated)

Module A

Introduction of participants

Module A is an introductory session in which participants will introduce themselves to their classmates and state their expectations of the training. The objective of Module A is that participants get to know each other and establish a friendly environment and learning basis for the entire training course. Information provided by the participants will also help the training facilitator get an understanding of their prior knowledge and experience, in order to assess the level of diversity in the class. A good facilitator needs to make sure that the training content is being understood by all training participants and needs to adjust his or her teaching methods accordingly.

The expectations of participants should be recorded on flipchart paper; the paper with the expectations should be hanging on the classroom wall of the training facilities throughout the whole course so that they can be looked at on the last training day.

A possible way of letting participants introduce themselves is to ask them to provide the following information:
1. Where they come from
2. What motivated them to become technicians
3. Where and how were they trained
4. How long they have they been in the construction industry
5. What their biggest challenges are
6. What they are good at
7. What they expect to learn from the training

Note: The facilitator(s) should also participate in the introductory session so that the trainees get to know who they will be working with throughout the training course.

Ground rules

After the introductions, it is important to agree on some principles for the entire training course – 'ground rules' that must be observed by all participants during the entire training period. The advantage of setting up these ground rules jointly, rather than just presenting a set of predefined rules, is that participants tend to follow rules more closely if they have participated in their development. Facilitators may also consider letting participants nominate a controller/inspector for each training day who makes sure that the ground rules are being followed by all. This means the unpleasant task of being the 'police officer' does not fall on the facilitator. The agreed ground rules should be written on flipchart paper in big, readable letters, and this should be hanging on the wall of the training facilities throughout the whole training course so that everybody can see them and remember what had been agreed upon.

Ground rules may include the following:

- Keep time during all sessions
- Switch off mobile phones when sessions are in progress
- Observe safety and welfare for other participants
- No smoking during indoor training sessions
- Always listen to what others have to say and do not interrupt others when they are talking

Note: If participants do not come up with ideas on potential ground rules, suggest some to them and let them discuss and agree on them.

Module B

Introduction to a building and its key components

Module B focuses on the definition of a building and its key components. The session explains the functional requirements of each component that makes a safe, strong, and stable building. The key components of a building covered in the training course are the following: foundation, floors, walls, openings in walls, roofs, and staircase.

Learning objectives

At the end of Module B, participants will be able to:

- Define/describe a building
- Understand the functions and functional requirements of the key components of a building

Module B shall cover the following training content

	Content	Activity	Practical	Time frame	Reference to manual
1	Definition of a building	Participants discuss their understanding of a building; facilitator takes notes on a flipchart Facilitator to assure that all main points are covered and add if necessary		15 min.	p. 1
2	Key components of a building	Participants to name major components of a building; facilitator draws building elements stated by participants on a flipchart or whiteboard Facilitator to highlight missing elements by pointing on the white space in the drawing Using the drawing produced, facilitator to ask participants to list all building parts: 1. Functions 2. Functional requirements 3. Different types of each building part		3 hours 15 min.	p. 2–9
3	Closing Module B/ Day 1	Facilitator to show pictures of different buildings (as enlarged and laminated printouts) and let people name building parts and their functions (recap of what has been learned in Module B)		30 min.	

Day 2/Module C: Building materials

This module introduces the participants to the various building materials and their quality requirements.

Training day	Module		Venue	Time frame	Materials needed
2	C	Building materials	Construction site	4 hours	Buckets, blocks, scale, cement, bottles, sand

Learning objectives

At the end of Module C, participants will be able to:
- Define and describe different building materials and their use
- Test and determine the required quality of different materials

Module B shall cover the following training content

	Content	Activity	Practical	Time frame	Reference to manual
1	Cement	Facilitator explains how cement works (hydration process) and how to store cement on site	Testing cement which has started hardening or forming lumps (Annex 1)	1 hour	p. 10
2	Sand (and gravel)	Facilitator show different gravel sizes, explains role of sand, and highlights that no salty sand can be used for construction works	Bottle test for testing clay content in sand (Annex 2)	30 min.	p. 11–12
3	Bricks	Facilitator shows different types of bricks and explains how they have been produced (can be done with participants, letting them express their understanding of how the bricks have been produced)	Drop test (Annex 3) Water absorption test (Annex 4)	1.5 hours	p. 14–17
4	Steel	Facilitator asks participants to explain the role of steel in building construction, shows different steel reinforcement types, and explains their usage		30 min.	p. 19
5	Closing Module C/ Day 2			30 min.	

Day 3/Module D: Concrete technology

This module focuses on how concrete works, what materials need to be used to make quality concrete, and its role in the construction industry. The module describes the different types of concrete and how to achieve the highest possible quality. Some of the salient points emphasized during the training are accuracy in measuring out mixing ratios, controlling the water-cement ratio, and curing.

Training day	Module		Venue	Time frame	Materials needed
3	D	Concrete technology	Construction site	6 hours (this session is 2 hours longer than the others)	Cement, sand, gravel, bricks, concrete blocks, steel, timber, slump test kit, timber for formwork

Learning objectives

At the end of Module D, participants will be able to:

- Define and describe the quality and role of concrete in building construction
- Test and identify quality materials for making quality concrete
- Make quality concrete products

Module D shall cover the following training content

	Content	Activity	Practical	Time frame	Reference to manual
1	Materials required to make concrete	Facilitator shows the participants various samples and qualities of the key materials	Basic tests to validate the quality of cement, sand, gravel, and steel (Annex 5)	30 min.	
2	Making formworks	Formwork	Making strong formworks (Annex 6)	1 hour	p. 40
3	Making reinforcement cages	Reinforcement cages	Practical exercise on bar bending, by making a reinforcement cage for a lintel bar (Annex 7)	1 hour	
4	How to make concrete	Participants explain how they make concrete Facilitator explains how to work out mixing ratios accurately and procedures for mixing concrete manually	Mixing of concrete (Annex 8)	1 hour	p. 42-43, Annex 1

	Content	Activity	Practical	Time frame	Reference to manual
5	The concrete slump test	The facilitator demonstrates how the slump test is performed and its purpose	Slump test (Annex 9)	1 hour	p. 41–42
6	Concrete pouring	Participants to present the procedures they follow in pouring concrete	Practical demonstration on how to pour concrete in a formwork (Annex 10)	30 min.	p. 41
7	Curing	Failitator explains the importance of curing concrete and the different possibilties for curing concrete	Concrete curing (Annex 11)	30 min.	p. 42–43
8	Summary of Module C/Day 3			30 min.	

Note for facilitator: This training day is six hours instead of the usual four hours, to have adequate time to conduct the practical exercises, which have to be implemented all at the same time.

Day 4/Module E: On-site construction activities I

This module is the first of four, taking the participants through the various construction stages step by step until the building is complete. Module E covers the following topics: safety precautions, preliminary construction activities, and setting out a building.

Training day	Module		Venue	Time frame	Materials needed
4	E	On-site construction activities I	Classroom	4 hours	Flipchart or whiteboard, markers, building plans

Learning objectives

At the end of Module E, the participants will be able to:

- Practice safety precautions for avoiding accidents at a building site
- Plan and prepare for preliminary construction activities before the main construction begins
- Set out a basic building accurately

Module E shall cover the following training content

	Content	Activity	Practical	Time frame	Reference to manual
1	Safety on a building site	Facilitator asks participants what safety precautions they usually implement on-site and takes notes on a flipchart or whiteboard. Facilitator to elaborate on protection gear, scaffolding, ladders, and other health and safety issues. Note: Bringing protection gear and showing how it protects workers will illustrate the topic.		45 min.	p. 22-25
2	Preliminary construction activities	Facilitator asks participants to list preliminary construction activities in chronological order; facilitator takes notes on a flipchart or whiteboard. Facilitator elaborates on site investigations, soil testing, site clearing, and establishing temporary facilities such as material stores, latrines, and offices.		45 min.	p. 28
3	Reading/ understanding building drawings/plans	Facilitator presents a sample of building plans and asks participants for interpretation	Group work: Divide participants in small groups of 4 to 5, give each group a set of building drawings/ plans, ask the group to discuss what they see on the plans, let each group present on plan (Annex 12)	45 min.	p. 40

	Content	Activity	Practical	Time frame	Reference to manual
4	Setting out a building	Facilitator explains the 3, 4, 5 method. After the explanation, class is to be continued in the courtyard open space next to the classroom	Set out a basic rectangular building (Annex 13)	45 min.	p. 22-25
5	Summary Module E/Day 4			30 min.	

Day 5/Module F: On-site construction activities II

Module F is the second module focusing on on-site construction activities. Module F covers the following topics: how to lay a foundation, how to lay floor slabs, and how to build strong walls.

Training day	Module		Venue	Time frame	Materials needed
5	F	On-site construction activities II	Construction site	4 hours	Metal pegs, general construction tools, gravel, sand, cement, concrete blocks or other bricks, clear/transparent hosepipe

Learning objectives

At the end of Module F, the participants will be able to:

- Lay strong and stable foundations
- Lay strong and stable floors
- Build strong and stable walls

Module F shall cover the following training content

	Content	Activity	Practical	Time frame	Reference to manual
1	Laying a foundation	Facilitator explains how to lay a level foundation strip (in classroom on construction site, if available; otherwise outside)	Determining the soil stability by driving metal pegs into the ground (Annex 14) Taking levels using various methods such as a line level or water and a transparent hosepipe (Annex 15)	1.5 hour	p. 30
2	How to lay a floor	Facilitator explains how to lay floor slabs, including preparation of the under surface; the purpose of hardcore, blinding, and a damp-proof membrane (DPM); concrete mixes; and laying big floors in sections		30 min.	p. 30
3	Building strong walls	The facilitator describes how to build stable walls and introduces different bonds	Bricklaying exercise on good bonding and joint sizes (Annex 16)	1.5 hours	p. 31-35
4	Summary of Module F/ Day 5			30 min.	

Day 6/Module G: On-site construction activities III

Module G is the third part of on-site construction activities and covers the following topics: how to make safe ladders and scaffolds, how to make formwork for supporting wet concrete, and how to make reinforcement cages.

Training day	Module		Venue	Time frame	Materials needed
6	G	On-site construction activities III	Construction site	4 hours	Timber, bush poles, steel, and nails

Learning objectives

At the end of Module G, the participants will be able to:

- Make safe ladders and scaffolds
- Name the various components of a pitched roof
- Design and make timber trusses

Module G shall cover the following training content

	Content	Activity	Practical	Time frame	Reference to manual
1	Ladders and scaffolds	Safety of construction workers	Making safe and strong scaffolds (Annex 17)	1.5 hours	p. 24
2	Roofing	Facilitator shows pictures of different pitched roof structures and asks participants to name the roof elements Facilitator shows different timber section sizes and their roles		45 min.	p. 36-37
3	Making a truss	Facilitator illustrates how to make a roof truss and how to join pieces of timber together	Making a wooden truss with strong joints (Annex 18)	1.5 hours	
4	Summary of Module G/Day 6			15 min.	

Day 7/Module H: Building services

This module covers the fourth and last part of on-site construction activities and focuses on the roofing and how to make trusses.

Training day	Module		Venue	Time frame	Materials needed
7	H	Building services	Construction site where building services are being installed; if no construction site with all three building services is accessible, the module can also be covered in a classroom	4 hours	Flipchart, timber, nails

Learning objectives

At the end of Module H, the participants will be able to:

- Understand the basic theory of water supply
- Understand how to safely dispose of wastewater
- Understand the basics of safe electrical wiring

Module H shall cover the following training content

	Content	Activity	Practical	Time frame	Reference to manual
1	Water supply	Facilitator asks participants to report on their previous experiences with water supply	Site visit: Facilitator explains and shows the basic principles and terminologies used in domestic water supply (Annex 20)	1 hour	p. 47
2	Drainage	Facilitator illustrates how to make a roof truss and how to join pieces of timber together	Site visit: Facilitator explains the basic terminologies and principles for domestic drainage (Annex 21)	1 hour	p. 48
3	Electrical wiring		Site visit: Facilitator explains and shows the basic principles and terminologies used for electrical wiring of a simple house (Annex 22)	1.5 hours	
4	Summary of Module H/Day 7			30 min.	

Day 8/Module I: Building finishes

Module I focuses on building finishes, which are the final applications done on a building. Building finishes have both a decorative and protective function and prolong the life of the building. Building finishes include plastering, pointing, doing ceilings and floor screeds, tiling, painting, and making the final touches.

Training day	Module		Venue	Time frame	Materials needed
8	I	Building finishes	Construction site in final stage	4 hours	

Learning objectives

At the end of Module I, the participants will understand:

- The importance of building finishes
- How to apply different building finishes

Module I shall cover the following training content

	Content	Activity	Practical	Time frame	Reference to manual
1	Commonly applied building finishes	Facilitator asks participants to name building finishes they have applied as well as their purposes; facilitator explains why building finishes are necessary		30 min.	p. 44–46
2	Building finishes	Site visit: Participants identify building finishes on-site and facilitator explains their role and how to apply them	Building finishes (Annex 23)	1 hour	p. 44–46
3	Finalizing and snag list	Site visit: facilitator plays client/building owner who identifies shortcomings and missing points; participants discuss the 'problem' and what needs to be done to satisfy him; facilitator wraps up and explain issues around each item	Snag list (Annex 24)	2 hours	
4	Summary of Module I/ Day 8				

Day 9/Module J: Evaluation and recap

During the last training day, the key messages of all the course modules will be repeated in a participatory manner to consolidate learning. The facilitator will further assess the level of understanding and knowledge participants gained. The session further includes an evaluation of training expectations and a general training evaluation, and ends with the handing over of training certificates.

Training day	Module		Venue	Time frame	Materials needed
9	J	Evaluation and recap	Classroom	4 hours	Flipchart or whiteboard and markers, enough copies of quiz and evaluation forms, pens, certificates

Module J shall cover the following training content

	Content	Activity	Practical	Time frame	Reference to manual
1	Assessment of knowledge gained	Participants take a quiz, answering questions on Modules B to J; after all participants have finished the quiz, the facilitator will go through the answers with them and highlight the key messages of each module	Quiz (Annex 25)	2 hours	
2	Evaluation of training expectations	Facilitator takes out the flipchart sheet from Day 1, on which the expectations of participants are listed, goes through each expectation, and asks if it was addressed by the training; if yes, the expectation will be crossed out. At the end, the facilitator will briefly address all expectations not yet crossed out.		30 min.	
3	Training evaluation	Participants fill evaluation forms	Evaluation (Annex 26)	30 min.	
4	Closing	Closing of training course by government official and handover of certificates		1 hour	

Overview of practical exercises, site visits, and group work

Day	Activity	Annex
2	Testing cement that has started hardening or forming lumps	1
2	Bottle test for testing clay content in sand	2
2	Drop test	3
2	Water absorption test	4
3	Basic tests to validate the quality of cement, sand, gravel, and steel	5
3	Making strong formworks	6
3	Practical exercise on bar bending, by making a reinforcement cage for a lintel bar	7
3	Mixing of concrete	8
3	Slump test	9
3	Practical demonstration of how to pour concrete in a formwork	10
3	Curing	11
4	Group work: Analysis of building plans	12
4	Setting out a basic rectangular building using the 3, 4, 5 method	13
5	Determining the soil stability by driving metal pegs into the ground	14
5	Taking levels using various methods such as line level or water and transparent hosepipe	15
5	Bricklaying exercise on good bonding and joint sizes	16
6	Making safe and strong scaffolds	17
6	Making a wooden truss with strong joints	18
7	Site visit: Basic principles and terminologies used in domestic water supply	19
7	Site visit: Basic principles and terminologies used in domestic drainage	20
7	Site visit: Basic principles and terminologies used for electrical wiring of a simple house	21
8	Site visit: Building finishes	22
8	Site visit: Snag list	23
9	Quiz to assess knowledge level	24
9	Evaluation form	25

Annex 1 - Testing cement that has started hardening or forming lumps

What needs to be prepared before the exercise

The exercise needs to be conducted in two parts! There must be one day between part 1 and part 2 of the exercise! Not more, not less!

1. Cut a plastic cylinder, with both ends open, from a plastic bottle, approximately 75 mm in diameter with a depth of 15 mm, for each group.
2. Organize a piece of plywood or sheet metal for each group.
3. Organize old cement which has started hardening and clean water.
4. Organize a trowel for each group.

Step-by-step implementation of practical

1. Facilitator explains how the test works: the participants will be divided into groups; each group will prepare some cement lumps using old cement which has started hardening and will test its quality the next day.
2. Facilitator divides participants into groups of three or four.
3. Each group gets a piece of plywood or a sheet of metal and a plastic cylinder.
4. Each group places the piece of plywood or sheet of metal on a flat surface on the ground or a bench if one is available.
5. Each group then mixes some old cement which has started hardening with water, making a paste that is not too wet.
6. Each group then fills the plastic cylinder with the cement paste, compacting it with a stick to ensure it fills the cylinder adequately and levels the top with the trowel.
7. The paste is then left to set in a protected environment for the next 24 hours.
8. The next day, the facilitator and the group will check the results. If the cement paste has hardened and if it is difficult to scratch it with a thumbnail, the cement is good. If the cement paste is still soft and can be scratched with the thumbnail, it should not be used.

Trainer's tip

This test is best performed under a roof or under a tree. A table or bench will be useful. The cement paste must be kept in a covered room protected from sunlight and rain.

Annex 2 - Bottle test for testing clay content in sand

What needs to be prepared before the exercise

The exercise needs to be conducted in two parts! There must be one day between part 1 and part 2 of the exercise! Not more, not less!

1. Organize an empty, used plastic water bottle for each participant with at least 500 ml capacity.
2. Prepare different samples of sand, both clean and dirty, with and without visual clay content. Dirty sand can be prepared by adding earth or dirt to the sand.
3. Organize clean water and table salt, ½ teaspoon per participant.
4. Get one ruler or measuring tape for each participant.

Step-by-step implementation of practical

1. Facilitator explains that the bottle test is being conducted in order to assess how high the clay content is in a sample of sand.
2. Each participant gets an empty, clean bottle and a sample of sand; some participants get clean sand samples, others dirty sand samples, while some get samples with a high clay content.
3. Each participant fills his/her bottle 50 percent full with the obtained sand sample.
4. Then everybody fills their bottle with water so that the bottle is filled to 75 percent.
5. Each participant adds ½ teaspoon of salt and thoroughly shakes the bottle vertically for at least one minute. By doing this, the clay content in the sand is dissolved in the water, leaving the sand to settle at the bottom of the bottle.
6. The bottles are set on a flat surface for one day. Any clay in the sand will settle on top of the sand.
7. The following day, the facilitator and participants take the bottles to check the results of the bottle test. Each participant measures with a ruler or measurement tape the thickness of (i) the sand layer and (ii) the clay layer, and calculates the percentage of clay in the sand. If there is more 10 percent clay in the sand, the sand either needs to be washed or cannot be used.

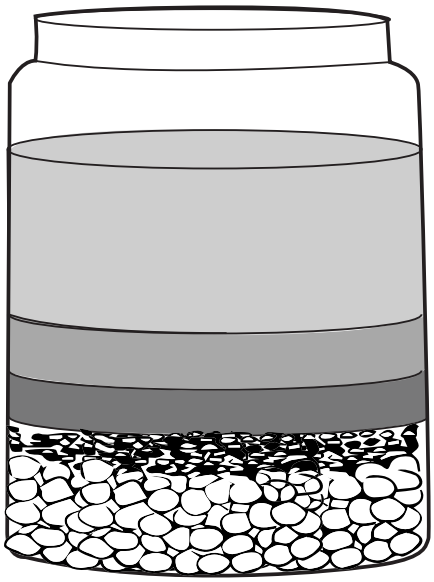

Trainer's tip

This test is best performed under a roof or under a tree. The bottles must be kept in a protected area where they will not be touched by anybody till the next traning day.

Formula to calculate the percentage:

100 / total thickness of solid elements in bottle (in cm)

thickness of clay layer (in cm) = clay layer (in percentage)

Annex 3 - Drop test

What needs to be prepared before the exercise

1. Supply concrete blocks. Their number depends on the following:
   - Dimensions: For the blocks used in the external walls, 2 blocks (20 cm x 20 cm x 40 cm) and 2 blocks (20 cm x 25 cm x 50 cm); for the blocks used in the internal walls, 2 blocks (10 cm x 20 cm x 40 cm) and 2 blocks (15 cm x 25 cm x 50 cm)
   - Manufacturer: Two blocks per manufacturer
2. Prepare a an appropriate surface (concrete slab or thick tile, at least 3 m^2 = 3 m x 1 m).
3. Organize a rigid tape measure or 1 m ruler.

Step-by-step implementation of practical

1. Facilitator explains how the test works: the objective of this test is to get to know if blocks are resistant enough or not. Compare to SECIL training manual, p. 16.
2. A drop test is the simplest way to test the strength of a building block: if the block survives from a height of one metre, it is strong enough to be used in a building. This is true for concrete blocks, fired bricks, and compressed earth blocks that are stabilized with a bit of cement to secure the already-adhesive qualities of clay.
3. Together, two participants each drop one block from a height of one metre (the blocks are same dimension and form) while the other participants watch the results.
4. Each time, the facilitator explains the result: if the block is not broken after the test, it is suitable for using at the construction site, but if the block breaks (even if it is only a small part that breaks off), this type of block is not suitable.

BRICK DROP TEST

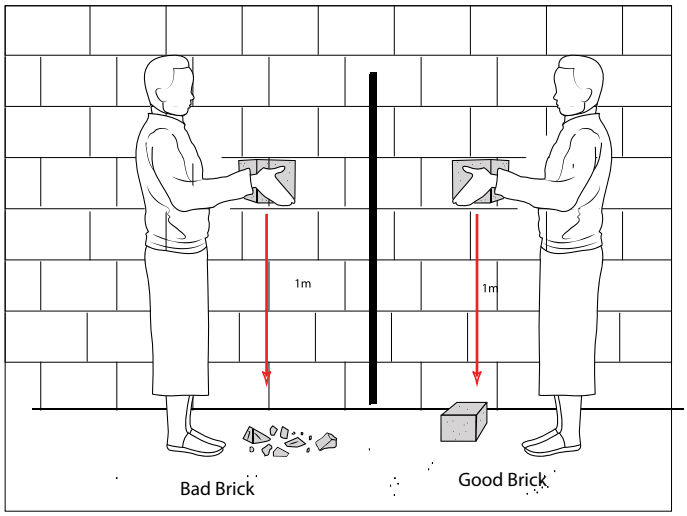

Trainer's tip

The exercise is best performed if the blocks are dry.

The best/most interesting results can be achieved if you manage to organize some good quality blocks and some bad ones.

Pay attention to control on the construction site. The foreman or other person who is responsible should practice this test for each 1,000-block delivery (he chooses 2 blocks randomly).

Annex 4 - Water absorption test

What needs to be prepared before the exercise

1. Organize a sufficient number of buckets, a variety of blocks, and a scale.
2. Ensure access to water on the day of the practical exercise.

The exercise needs to be conducted in two parts! There must be one day between part 1 and part 2 of the exercise! Not more, not less!

Step-by-step implementation of practical

1. Facilitator explains how the test works: a block will be placed in a bucket of water for 24 hours; after 24 hours, the level of water absorption says something about the quality of the block. If the block has absorbed a lot of water, it means that the block is of poor quality; if the block has absorbed little water, it means that the block is of good quality.
2. Facilitator divides participants into five groups.
3. Each group gets a bucket and a block:
   Group 1: sundried brick
   Group 2: burnt brick
   Group 3: stabilized soil blocks
   Group 4: solid concrete block
   Group 5: hollow concrete block
4. Each group weighs its block on a scale and records the weight.
5. Each group fills the bucket with water and places the brick inside.
6. The buckets with water and bricks will be stored at a safe place overnight.
7. On the next training day, participants will check the results of the test by weighing the block on the scale.
8. Compare the old and the new weight of the blocks. If the block has gained more than one-third of his previous weight, the quality of the block is poor. If the block gained less then one-third of its original weight, the quality is good.
9. Facilitator explains the results.

Trainer's tip

This practical exercise can only be conducted on two subsequent training days, as the block would otherwise soak more and more water, which would lead to different test results.

The best/most interesting results can be reached if you manage to organize some good quality blocks and some bad ones.

SOAKING BRICK INTO WATER

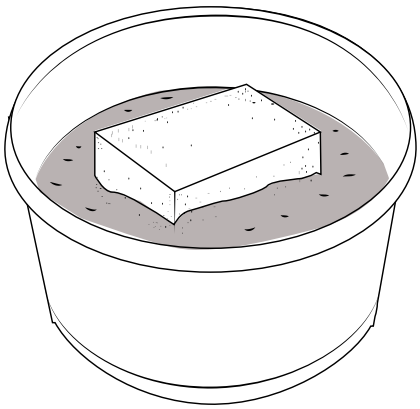

Annex 5 - Basic tests to validate the quality of cement, sand, gravel, and steel

What needs to be prepared before the exercise

The exercise needs to be conducted in two parts! There must be one day between part 1 and part 2 of the exercise! Not more, not less!

Step-by-step implementation of practical

Trainer's tip

Annex 6 - Making strong formworks

What needs to be prepared before the exercise

Organize the following materials:

1. A minimum of 6 pieces of timber 100 mm x 25 mm x 4 m, 32 pieces of timber 50 mm x 50 mm x 50 cm, 1 piece of timber 50 mm x 25 mm x 1 m, and 500 g of 7 cm nails.
2. Three carpenter's hammers, 3 carpenter's saws, 3 spirit levels, 3 plumb bobs, 4 round section pieces of wood 100 mm in diameter, and 1 tape measure 3 m in length.
3. Two kg of metallic thread 3 mm in diameter.
4. Prepare a proper surface, flat and rigid enough (compacted soil).

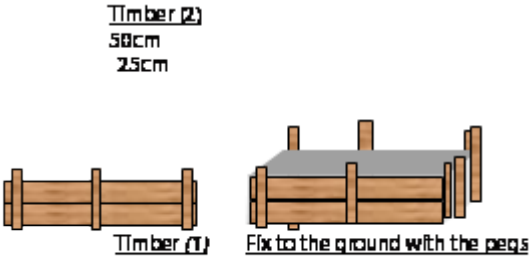

Step-by-step implementation of practical

1. Facilitator explains how the test works: the participants will be divided into six groups.
2. Each group prepares their pieces of timber and carpenter tools.
3. Each group places their wood on a flat surface on the ground.
4. Groups 1 and 2 prepare a formwork for a foundation of 50 cm x 50 cm x 20 cm; they cut the timber to the 1 m piece and assemble with nails every 2 pieces of timber by 2 pieces of timber and assemble the four sides using the metal thread.
5. Groups 3 and 4 prepare a formwork for a pillar of 20 x 20 x 100 cm; for the 2 sides, they assemble with nails every 2 pieces of timber by 3 pieces of timber (2), and for the 2 other sides they assemble with nails every 2 pieces of timber 100 mm + 1 timber 50 mm of large by 3 pieces of timber (2 1 and assemble the four sides using the metal thread.
6. Groups 5 and 6 prepare a formwork for a beam of 20 x 100 x 20 cm, for the 3 sides; they assemble for 2 sides with nails 2 pieces of timber by 3 pieces of timber and for the bottom with nails 2 pieces of timber 100 mm large + 1 timber 50 mm large by 3 pieces of timber, assembling the four sides with metal thread.
7. Pay attention that right angles (90°) have been achieved around the corners inside of the formwork; for that, check if the diagonals are equal.
8. Level the pillar by using the plumb bob and fix it by putting the round section pieces of wood on the four sides of formwork, to fix on the end side of the formwork and the other to the soft ground.
9. For maintaining the beam formwork on the high side, use the round section woods at the bottom of the formwork, to fix on the end side of the formwork and the other to the soft ground; the beam should be leveled by using a transparent hosepipe.
10. Pay attention to the resistance of the formwork, particularly for the beams and the slab-floors. It must be taken into consideration that it has to withstand the weight of the concrete (2,200 kg/m³) as well as the load of a worker.

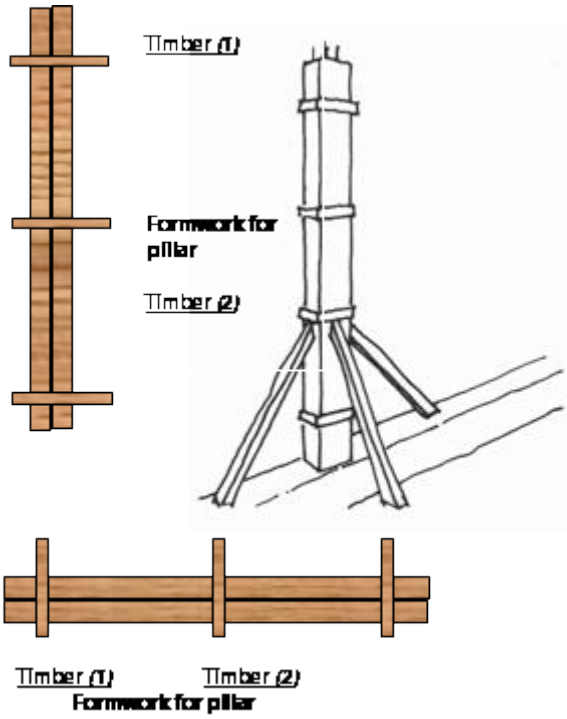

Trainer's tip

The exercise is best performed outside on level and soft ground.

Annex 7 - Practical exercise on bar bending, by making a reinforcement cage for a lintel bar

What needs to be prepared before the exercise

1. Organize different types of bars, including a round bar (D = 6 mm) of 12 m, rebar (D = 14 mm) of 12 m, and 1 kg of metallic thread, 2 mm in diameter.
2. Organize adequate tools – 8 pliers, 1 or 2 rebar cutters (if available, 1 for each group), and 1 rebar bending table.
3. Organize a proper surface, flat and rigid enough (compacted soil).

Step-by-step implementation of practical

1. Facilitator explains the principle of the reinforcing cages and their role in creating reinforced concrete.
2. Facilitator explains different types of reinforcing cages, for foundations, columns, walls, beams, and slabs.
3. The participants will be divided into 4 groups of 4.
4. Each group gets a set of tools (2 pliers and 1 rebar cutter) and a 3 m tape measure; the rebar bending table is used collectively.
5. Each group gets directions on what type of reinforcing cages they shall make and does the following accordingly.
6. Footing for groups 1 and 2:
   - The participants cut rebar of D = 14 mm, 60 cm long.
   - Using the rebar bending table, they bend 10 cm with an 90° angle minimum from each side of the bar.
   - They assemble perpendicularly, 3 up and 3 down, these 6 rebars with metallic thread, leaving a 15 cm space between each rebar.
7. Lintel bars for groups 3 and 4:
   - For longitudinal reinforcement, the participants cut 4 rebars of D = 14, 1.2 m long.
   - The participants cut 5 round bars of D = 6 mm, 70 cm long.
   - Hooks – using the rebar bending table, they bend 5 cm with a 135° angle from one side of the bar, bend 4 times at 13 cm with a 90° angle, and bend 5 cm with a 135° angle of the end side, always in the same direction.
   - They place the longitudinal reinforcement inside the hooks and space the hooks 20 cm apart.
   - It is necessary to alternate the hook position once to the right, once to the left.
8. Facilitator explains the other types of reinforcing cages, including slabs and walls.
9. Facilitator ensures that all main points are covered; if necessary, he or she can ask a professional to explain.

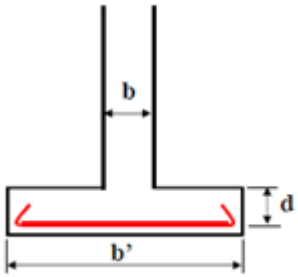

Trainer's tip

The exercise is best performed if the participants can practice different types of rebar bending.

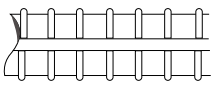

Twisted bar, round bar, and ribbed bar.

Annex 8 - Mixing of concrete

What needs to be prepared before the exercise

The exercise needs to be conducted in two parts! There needs to be one week between part 1 and part 2 of the exercise!

1. Organize 100 l sand, 100 l gravel, and 50 kg cement.
2. Organize tools for mixing concrete: 6 shovels, 6 buckets, a 50 cm metal rod, and 6 trowels.
3. Organize an appropriate place for mixing, preferably a concrete slab of 4 m²; alternatively, create a clean base by using plywood, some old metal sheets or some rubber sheets (in this case, the mortar can be prepared in the wheelbarrow, because of the small quantity).
4. Organize a watering can and 3 m² of plastic sheeting.
5. Organize a 50 l water tank.
6. Organize 6 wooden molds with an inner dimension of 10 x 10 x 60 cm (prepared on-site by cutting a piece timber of 2 parts of 80 cm and 2 parts of 10 cm, then assembled using 2 metallic threads, with the 2 smaller parts perpendicular to the longer parts).

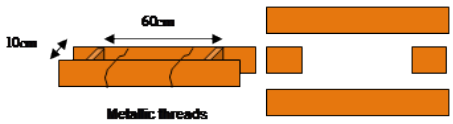

Step-by-step implementation of practical

First part of the exercise:

1. Facilitator explains how the test works: the participants will be divided in 6 groups, and each group will mix a different type of concrete; the strength of each concrete sample will be tested after a week's time. (For mixing concrete, see SECIL training manual p. 53 and 54.)
2. Facilitator divides participants into 6 groups.
3. Distribute mixing tools to each group: 1 shovel, 1 bucket, and 1 trowel, as well as cement, sand, gravel, and water to produce concrete (for 20 l of concrete, the exact quantity mention below).
4. Each group mixes concrete at the appropriate strength indicated in the SECIL training manual p. 40.
   - Group 1 and 2 mix low-strength concrete (M100-M150) at the rate of: 1 part cement (2 l) to 4 parts sand (8 l) to 6 parts gravel (12 l) .
   - Group 3 and 4 mix medium-strength concrete (M200-M250): 1 part cement (3 l) to 3 parts sand (9 l) to 3 parts gravel (9 l).
   - Group 5 and 6 mix high-strength concrete (M300-M350): 1 part cement (4 l) to 2 parts sand (8 l) to 2 parts gravel (8 l).
5. Each group places the wooden mold on the flat surface of the ground.
6. Each group then mixes the concrete mixture it has prepared with the same ratio of water: 1 part water to 2 parts cement.
7. Each group then pours the concrete into the wooden mold. Groups 1, 3, and 5 compact it with a metal rod to ensure air bubbles are removed and level the top with the trowel; the 3 other groups fill their molds without compacting.
8. All samples must be kept humid through the following procedure (see also practical exercise No. 8):
   - Groups 1, 3, and 5 by covering with a plastic sheet and humidifying (by water curing) the day after pouring concrete. Humidity must be verified 2 times during the 7 days after pouring.
   - Groups 2, 4, and 6 by using a watering can and humidifying (by water curing) the day after pouring concrete and every day (if the training participants will be not present 7 consecutive days after pouring concrete, they can humidify by covering).
9. After 7 days, the concrete strength is normally 60 to 75 percent of its final strength. So the second part of the practical exercise will have to be done after 7 days.

Second part of the exercise (seven days after conducting the first part):

10. The facilitator explains and shows how the strength of the concrete blocks is tested:
    - Place the block on its largest face.
    - Place under the block, and perpendicular to the long dimension, two tubes laid 50 cm apart and 5 cm from the edges of the block.
    - On the upper face and parallel to the first two tubes, place 2 tubes laid 10 cm apart and 25 cm from the edges of the block.
    - Place a 20 cm x 40 cm metallic plate or wooden plank on top of the 2 last tubes.
    - Load this plate with bricks with a constant loading during the test (e.g. 50 bricks per minute).
    - The same speed of loading should be kept for the other 5 tests.
    - Concrete strength is calculated by adding the weight of the bricks on the plank.

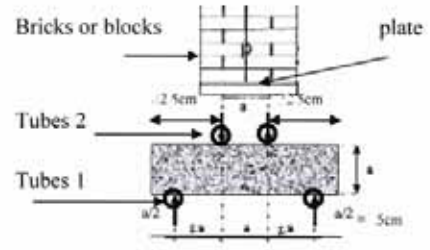

11. Facilitator analyses and explains the results of the 6 samples prepared in the first phase of the exercise. He shows and explains the role and importance of the cement and the compaction in the concrete mortar. The group will comment on the different results. Summary of expected results:
    Group 1 and 2: Cement ratio is low. Grain size distribution is good.
        Group 1: Mortar is compacted with a metal rod.
        Group 2: With no compaction at all, density is impossible to achieve.
        The strength of concrete sample 1 is higher than that of sample 2.
    Group 3 and 4: Cement ratio is medium. Grain size distribution is medium.
        Group 3: Mortar is compacted with a metal rod.
        Group 4: With no compaction at all, density is impossible to achieve.
        The strength of concrete sample 4 is less than sample 3 but more than 1 and 2, because there is more cement in the mixture.
    Group 5 and 6: Cement ratio is high. Grain size distribution is good.
        Group 5: Mortar is compacted with the metal rod.
        Group 6: With no compaction at all, density is impossible to achieve.
        The strength of the concrete sample 6 is less than sample 5 but more than 1, 2, 3, and 4, because there is more cement in the mixture.
12. Facilitator explains the role of the cement in the concrete (compare with p. 40 of the SECIL construction manual).
13. Facilitator highlights the importance of good compaction!

Trainer's tip

This test is best performed under a roof or under a tree. The concrete element must be kept in a covered place and protected from sunlight and rain. Never mix concrete or mortar directly on the ground.

Group	1	2	3	4	5	6	Notes
Cement ration	100	100	200	200	300	300	
Compaction	Y	N	Y	N	Y	N	
Hardness		weaker than 1	stronger than 1 and 2	weaker than 3	stronger than 1, 2, 3, and 4	weaker than 5	

The water-to-cement ratio depends on the humidity of sand. If the sand is humid (e.g. after raining or when the sand has just arrived from sand washing), less water must be used.

1,200 l of aggregate (sand and gravel) is needed for 1 m^3 of finished mortar.

Annex 9 - Slump test

What needs to be prepared before the exercise

1. Organize 30 l sand, 30 l gravel, 10 l cement, and 20 l water for preparing mortar and washing the mold.
2. Organize tools for mixing concrete: 1 shovel, 1 wheelbarrow, 1 trowel, and 1 bucket.
3. Organize a trowel, a 50 cm metal rod, 1 l of used engine oil, and a tape measure.
4. Organize a set of molds (cone form, with the following dimensions: top diameter 10 cm, bottom diameter 20 cm, and height 30 cm).
5. Organize an appropriate place for mixing, preferably a concrete slab of 2 m^2; alternatively, create a clean base by using plywood, some old metal sheets, or some rubber sheets (in this case the mortar can be prepared in the wheelbarrow, because of the small quantity).

Step-by-step implementation of practical

1. Facilitator explains that the slump test is used to determine the workability of fresh concrete and that too much water can decrease its resistance.
2. The internal surface of the mold is thoroughly cleaned and applied with a light coat of oil.
3. The mold is placed on a smooth, horizontal, rigid, and nonabsorbent surface.
4. Mix a dry concrete mortar (M200–M250): 1 part cement (5 l) to 3 parts sand (15 l) to 3 parts gravel (15 l). (For mixing concrete, see SECIL training manual p. 53 and 54.)
5. For the first sample, add 2 l of water.
6. The slump mold is then filled in four layers with this freshly mixed concrete; each layer is approximately one-fourth of the mold's height.
7. Each layer is tamped 25 times by the metal rod (strokes are distributed evenly over the cross section).
8. After the top layer is ready, the concrete is struck off the level with a trowel.
9. The mold is removed from the concrete immediately by raising it slowly in the vertical direction.
10. The difference in level between the height of the mold and that of the highest point of the subsided concrete is measured.
11. This difference in height in mm or cm is the slump of the concrete.
12. Duplicate the test by adding 2.5 l of water to the mortar in the bucket; the third time add 3 l; the fourth time add 3.5 l; and the fifth time add 4 l.
13. The facilitator explains the results of the practical exercise.
14. A slump of 25 to 50 mm means that the concrete sample is dry; a slump of 150 to 175 mm means that the concrete sample is too wet.
15. The value of slump is specifically mentioned in the mix design prepared by the structural designer (see also SECIL training manual p. 41).

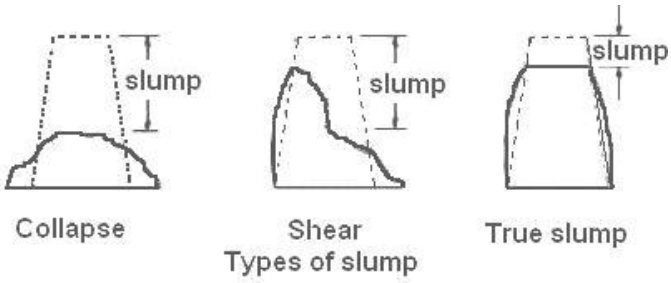

Trainer's tip

This test is best performed under a roof or under a tree.

Annex 10 - Practical demonstration of how to pour concrete in a formwork

What needs to be prepared before the exercise

It is better to do this exercise after doing practical exercise No. 18. Exercise No. 9 could be done at the same time.

1. Organize 100 l sand, 100 l gravel, and 50 l cement.
2. Organize tools for mixing concrete: 3 shovels, 6 buckets, 1 l used engine oil, and 3 trowels.
3. Organize an appropriate place for mixing, preferably a concrete slab of 4 m^2; alternatively, create a clean base by using plywood, some old metal sheets, or some rubber sheets.
4. Organize a concrete vibrator or 2 metal rods (1.5 m and 1 m long).
5. Organize 1 m of PVC tube with a diameter of 10 cm for pouring the pillar's concrete; it must be 20 cm longer than the pillar.
6. For the mold, take the formworks prepared in exercise No. 7 (Annex 7). If unavailable, at least 2 formworks should be prepared, 1 for the pillar (vertical, 20 cm x 20 cm x 1 m) and another one for beams (horizontal, 20 cm x 230 cm x 1 m), before starting the session.
7. For the foundation, the ground on the site should be dug; the dimensions of the pad foundation are 50 cm x 50 cm on the base and 20 cm deep. The sides of the foundation should be always separated by a plastic sheet.

Step-by-step implementation of practical

1. The facilitator explains to the participants how to pour concrete inside a formwork. The participants will be divided into 3 groups.
2. Each group will prepare the concrete for pouring in the formwork done in the exercise No. 18 (this means No. 18 must already be completed or must be prepared for this exercise).
3. The dimensions will be:
   - Pillar (vertical, 20 cm x 20 cm x 100 cm = 40 l)
   - Beam (horizontal, 20 cm x 20 cm x 100 cm = 40 l)
   - Foundation (50 cm x 50 cm x 20 cm = 50 l)
4. Each group gets 1 shovel and 2 buckets, as well as cement, sand, gravel, and water, and prepares the concrete as explained below.
   - 1 part cement (12 l), 2 parts sand (24 l), and 2 parts gravel (24 l) for the pillar and beam.
   - 1 part cement (12 l), 2 parts sand (24 l), and 3 parts gravel (36 l) for the foundation.
5. When the concrete is ready, the slump test should be done, because too much water decreases its resistance, and it is not easy to verify the exact quantity of water simply by looking, as sand could be moist after rain.
6. Facilitator explains to the participants how to pour concrete, following the steps below.
7. Sprinkle the inner sides of the form with used engine oil – without oiling, the wood will absorb moisture and as a result stick to the hard concrete.
8. For pouring concrete into the forms for foundations and beams, a bucket can be used.
9. For pouring concrete into a pillar form, always use a pipe to guide the concrete at the foot of the form, otherwise the ingredients will be separated at the bottom.
10. Vibrate (using a concrete vibrator) the concrete thoroughly every 50 cm in the pillar, especially in the case of crushed gravel, to ensure that the steel is well embedded in the concrete and the air goes out (no mechanical vibrator should go near the sides because it can damage the formwork).
11. If the concrete vibrator is not available, the concrete should be compacted using a metal rod every 20 cm of height (using the 1 m metal rod for the foundation and beams and the 1.5 m rod for the pillars).
12. Level the top with the trowel.
13. Facilitator to ensure that the main points are covered, especially the following:
    - Pay attention to preparing the right quantity of concrete, as it can only be used for 30 minutes after water has been added. This quantity depends on the number of workers and the difficulty of the work (pillars, beams, etc.) but should never exceed 4 wheelbarrows for each mixture.
    - Pay attention to the pillar formwork, which should be vertical; the beams and slab-floors formwork should be horizontal. Also, verify all the levels before pouring concrete.
    - Pay attention to the resistance of the formwork, particularly for the beams and the slab-floors. It must be taken into consideration that it has to withstand the weight of the concrete (2,200 kg/m^3), as well as the load of a worker.

- For example, for a beam with the dimension:
  - 0.3 m x 0.3 m x 3 m = 0.27 m^3 as 1 m^3 = 1,000 l so 0.27 m^3 x 1,000 = 270 l
  - And 1 m^3 of concrete = 2,200 kg so 270 l of concrete = (1,000/2,200 kg) = 594 kg is the concrete weight
  - 594 kg + (2 x 80 kg = 2 workers) + (vibrator = 60 kg) > 800 kg
- Pay attention to pouring concrete right into the corners and along the edges on the form or hole with a spade or a trowel.
- Ensure that the steel reinforcement is properly distanced from the formwork to ensure appropriate concrete coverage.
- Pay attention to pouring concrete between the rebar and formwork.
- Pay attention to compacting the concrete to ensure that it penetrates all corners and to eliminate air bubbles in the mixture (in case of the lack of a mechanical vibrator, compact by using a metal rod and tapping the formwork).

See also SECIL training manual p. 41.

Trainer's tip

The exercise is best performed outside on level and soft ground.

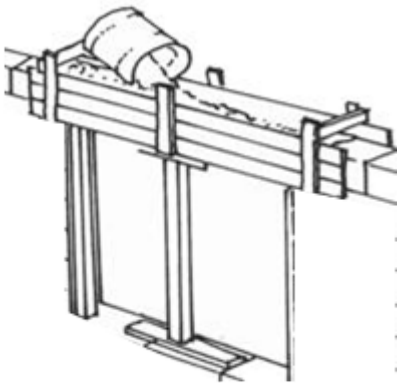

Annex 11 - Curing

What needs to be prepared before the exercise

1. Supply 3 m² plastic sheet or cloth.
2. Organize a 50 l water tank.
3. Organize 3 watering cans.

The exercise needs to be conducted in two parts! There must be seven days between part 1 and part 2 of the exercise! Not more, not less!

Step-by-step implementation of practical

1. Facilitator explains the objective of the practical exercise, which is to keep the surface of the concrete moist and to stop it from drying out. He demonstrates the two most important ways of curing concrete, explained below (SECIL training manual p. 42 and 43).
   a) Covering (to keep moist)
   Plastic sheets or other similar material form an effective barrier against water loss. They can be used for flat surfaces like slabs, concrete roofing, and in a concrete brickyard. The wooden formwork of the pillars and the beams can also be used to maintain moisture.
   b) Water curing
   Water curing is carried out by supplying water to the surface of the concrete; this is achieved by watering it every day (if the weather is windy or hot, several time per day) and ensures that it is kept continuously moist (SECIL training manual p. 42 and 43).
2. Facilitator divides participants into six groups
3. Groups 1, 3, and 5 get a plastic sheet or cloth and cover the samples produced from the last exercise (No. 7); the humidity must be controlled at least 2 times during the 7 days after pouring.
4. Groups 2, 4, and 6 get a watering can, and they humidify the samples the day after pouring concrete and every day.
5. If the training participants will be not present seven consecutive days after pouring concrete, they can humidify by covering.
6. Facilitator explains the advantage of each one: the first case needs less water, and second one is easier to achieve but needs more water.

Trainer's tip

The concrete must be protected from a hot, windy environment and rain.

Curing (Version 2)

What needs to be prepared before the exercise

1. Organize 15 l sand, 20 l gravel, and 10 l of cement.
2. Organize tools for mixing concrete: 3 shovel, 3 wheelbarrows, 3 buckets, and 3 trowels.
3. Organize an appropriate place for spreading out the concrete (a clean and flat surface on the ground).
4. Supply 3 m² plastic sheet or cloth.
5. Organize a 50 l water tank.
6. Organize 3 watering can.

The exercise needs to be conducted in two parts! There must be seven days between part 1 and part 2 of the exercise!

Step-by-step implementation of practical

First part of the exercise:

1. Facilitator divides the participants into 3 groups.
2. Facilitator explains to the participants that, before starting this exercise, they should prepare some concrete through the following procedure:
   - Distribute mixing tools to each group: 1 shovel, 1 wheelbarrow, 1 bucket, and 1 trowel.
   - Each group mixes a low-strength concrete (M100-M150) at the rate of: 1 part cement (2 l), 4 parts sand (8 l), 6 parts gravel (12 l). (SECIL training manual p. 40.)
3. Facilitator explains the test and the exercise, which is to keep the surface of the concrete humid and to keep it from drying out. He or she demonstrates the two most important ways of curing concrete, explained below (SECIL training manual p. 42 and 43):
   a) Covering (to keep moist)
   Plastic sheets or other similar materials form an effective barrier against water loss. They can be used for flat surfaces such as slabs, concrete roofing, and in the concrete brickyard. The wooden formwork of the pillars and the beams can also be used to maintain humidity.
   b) Water curing
   Water curing is carried out by supplying water to the surface of concrete; this is achieved by watering it every day (if the weather is windy or hot, several times per day) and ensuring that it is kept continuously moist.
4. Each group places 2 m² of plastic sheet flat surface on the ground.
5. Each group pours a concrete slab of 60 cm x 60 cm x 6 cm by spreading out the concrete mixture on the plastic sheet.
6. Group 1 covers the slabs with the rest of the plastic sheet and humidifies the day after pouring concrete. Humidity must be verified 2 times during the 7 days after the pouring.
7. Group 2 cures the slab by using the watering can during the 7 days after pouring concrete. (If the training participants will be not present 7 consecutive days after pouring concrete, they can humidify by covering.)
8. Group 3 leaves the slab without curing.

Second part of the exercise:

9. After 7 days, the concrete attains strength.
10. Facilitator explains the results and the advantage of each one; the first case needs less water, and second one is easier to achieve but needs more water.
11. In a hot and windy environment, slab number 3 will not be good for using because the hydration process is not complete, it is not solid, it cannot support any load, and its life is very short.

Trainer's tip

The concrete must be protected from a hot, windy environment and rain.

Annex 12 - Group work: Analysis of building plans

What needs to be prepared before the exercise

1. Organize 4 sets of building drawings, including a plan, 4 elevations, and 2 sections (see attached).
2. Organize a flipchart.
3. Organize 16 markers.

Step-by-step implementation of practical

1. Facilitator explains the objective of the exercise, which is to explain the functional requirements of each component that makes a safe, strong, and stable building.
2. The participants will be divided into four groups; each group choses one person to represent the group.
3. Each group will take one part of the building drawings through the following procedure:
   - Group 1 takes the main plan.
   - Group 2 takes 2 of the 4 elevations.
   - Group 3 takes 2 other pages of the 4 elevations.
   - Group 4 takes 2 section plans.
4. Each group will take a sheet of flipchart paper and 4 markers.
5. In each group, after sharing among the group, the names of the major components will be mentioned from the bottom of a building section drawing to its top, and the responsible person will write all the building parts on the flipchart.
6. Each group presents the result, and all participants can intervene.
7. At the end of the presentation, the facilitator is to ensure that all the main points are covered, add some if necessary, and show pictures of different buildings.

Trainer's tip

A visit could be organized to a construction site which has yet to do the finishes, so that the participants can see the different building parts.

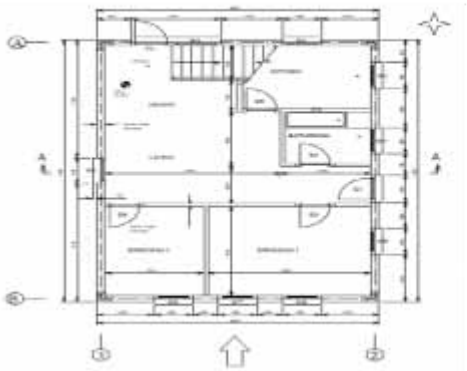

Annex 13 - Setting out a rectangular building using the 3, 4, 5 method

What needs to be prepared before the exercise

Organize the following materials: a minimum of 12 pegs, either wooden or metal, a piece of timber 100 mm x 25 mm (4" x 1") x 4 m, a piece of timber 50 mm x 50 mm (2" x 2") x 4 m, ½ kg of 3" nails, carpenter's hammer, carpenter's saw, building lines (strings), spirit level, and two tape measures (3 m and 10 m).

Step-by-step implementation of practical

1. The facilitator explains to the participants in the classroom, using a flipchart or whiteboard, how a rectangular building is set (compare with training manual p. 22 to 25).
2. He then takes the participants outside to the courtyard or garden next to the classroom and demonstrates step by step how to set out a building following the procedure explained below.
3. The baseline/frontage of the building is established first by driving two pegs firmly into the ground, representing the entire length of the building. If using wooden pegs, fix a nail on top of each peg to tie the strings around.
4. Tie a string/building line from one peg to the other peg tightly.
5. From one corner peg, measure a distance of 4 m along the building line and drive in another peg at the 4 m mark.
6. From the same corner, one of the participants stretches a measuring tape to the 3 m mark.
7. Another participant stretches the other measurement tape from the peg at the 4 m mark until it meets the 3 m mark at the 5 m mark. By doing this, a 90 degree angle is established at the corner.
8. The participant holding the measurement tape at the 3 m mark stretches it the full width of the building. Another peg is driven into the ground, establishing the third corner of the building.
9. This same process is repeated at the other corner, establishing the fourth corner of the building.
10. To verify that this process has been done accurately, the diagonals of the building are checked to see if they are equal. If they are equal, then the exercise is a success. If not, the process must be repeated again until the diagonals are equal.

Trainer's tip

The exercise is best performed outside on level and soft ground.

Annex 14 - Determining the soil stability by driving metal pegs into the ground

What needs to be prepared before the exercise

1. Organize 4 picks.
2. Organize various site visits, because for better understanding of the exercise, it is better to practice the test in different types of soil.
3. For the shrinkage test, cut a plastic cylinder with both ends open from a plastic bottle, approximately 75 mm in diameter and with a depth of 15 mm.

Step-by-step implementation of practical

1. Facilitator explains that the objective of this exercise is to determine the soil stability. This is important because the foundation spreads out the weight of walls, roof, slabs and inhabitants onto the ground. And the size of the foundation depends also on the nature/stability of the ground (SECIL training manual p. 28 and 29).
2. Facilitator demonstrates step by step how to determine the soil stability following the procedure below.
3. Clear the ground from vegetation and top soil, which is loose and has a low load-bearing capacity.
4. Hit the picks into the ground with as much force as possible.
5. If a person using all his strength cannot get the pick in and the trace is superficial, we can say that the quality of soil is good and it has a high load-bearing capacity.
6. If a person using all his strength can get the pick in and the depth is between 2-5 cm, we can say that the quality of soil is average.
7. If without much force the trace of the pick is more than 10 cm deep (or the soil can be removed with a shovel), we have bad soil with a low load-bearing capacity. In this case, the trenches must be deeper and the foundation will be larger and higher than the others.
8. If, in a different part of the ground, the quality of the soil changes, the test should be done in the deeper surface and the weaker result selected.
9. Facilitator explains that the type of soil, in terms of its strength and load-bearing capacity, will help the design team in determining the type of foundation and building materials to use.
10. Facilitator explains further that this exercise is not the only one that can determine soil stability; the behaviour of the soil with regard to moisture is also very important, and can be determined with the shrinkage test:
    - No shrinkage: sandy soil, which deals well with moisture.
    - Little shrinkage without cracking: low clay soil, more or less good.
    - Significant shrinkage and cracking: clay soil; we must be careful, because the foundation might move after rain or any other increase in moisture.

Trainer's tip

If it is not possible to visit different sites with different soil types, it is necessary to test the soil at different depths. On the construction site, this exercise is usually done by the person who is in charge of the structure calculation.

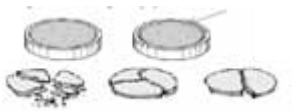

Annex 15 - Taking levels using various methods such as line level or water and transparent hosepipe

What needs to be prepared before the exercise

Organize various types of levelling tools, such as:

- 1 line level
- 1 water and transparent hosepipe 10 m long
- 2 spirit levels
- A minimum of 12 pegs, either wooden or metal, 50 cm each
- 1 straight metallic or wooden profile (60 mm x 40 mm x 4 m long)
- 2 tape measures: a) 3 m long and b) 10 m long
- 2 markers of different colours
- 1 carpenter's hammer

Spirit level

Step-by-step implementation of practical

1. Facilitator explains that the objective of this exercise is to introduce and try out various types of levelling tools for levelling the ground before starting to dig the foundation of a building.
2. He or she takes the participants outside to the courtyard or garden next to the classroom and demonstrates step by step how to level the ground following the procedures explained below.
3. The participants will be divided into two groups of eight.
4. Group 1 will take a spirit level and the long profile (this method could be used inside the building as well as for slab concrete, floor finishes, tile work, and external paving; however, for a construction yard, it takes too much time unless it is for a small area only).
   Step 1: Hit a peg near each corner of the room.
   Step 2: Tie a string between the opposite corners (diagonals) inside a room and drive a metallic peg firmly at the centre (the crossing point of the two diagonals) of the area.
   Step 3: Place one side end of the profile on the top of peg 1 and another side end close to peg 2; after levelling the profile by spirit level, peg 2 will be marked at the lower face of the profile, and so on for other pegs.
   Step 4: Duplicate the same process between peg 1 and other pegs.
   Step 5: The point mark of the other 2 pegs (e.g. pegs 3 and 4) should be levelled; if not, the process must be repeated again.
   Step 6: Tie a string/building line tightly between the pegs that will be passed from all of the pointed marks of the pegs and from the top of the peg.
   Step 7: This building is levelled and it could be used for the finished floor (finished level normally is mention in the drawing).
5. Group 2 takes the transparent hosepipe (this method is suitable for every type of levelling, as well as a construction yard and inside the foundation or beams).
   Step 1: After setting out the building using the method explained in practical exercise No. 12, use a hammer to plant one peg at the centre (the crossing point of the two diagonals) and several pegs on each side of the building (the distance between the pegs should not be more than 3 m, divided into equal parts).
   Step 2: If the slope of the ground is huge (more than 1 percent), plant the longer pegs at the lowest level.
   Step 3: Fill water inside the hosepipe until you are sure that no air bubbles are inside all along. Leave about 30 cm empty on each side of the pipe.
   Step 4: Place one end of the hosepipe close to peg 1 and take another end side close to peg 2.
   Step 5: The water level inside of the pipe near peg 1 should be equal to the top of this peg and the water level. Inside the pipe near peg 2 should pointing somewhere on this peg; this point should be marked.

Step 6: If peg 2 is too short, it should be changed with a longer one.
Step 7: Duplicate the same process between peg 1 and all the pegs.
Step 8: The point mark of the other two pegs (e.g. pegs 3 and 4) should be levelled. If not, the process must be repeated again.
Step 9: Tie a string/building line between the pegs at the marked point tightly.
Step 10: Using a tape measure between the marked point on the pegs and the ground, the exact slope of different sides of the building will be defined.

6. Facilitator explains the advantage of each method; it is very difficult to obtain a good, exact result from the first method, which also takes very long to realize. By using the transparent hosepipe, the result will be obtained faster and with more precision.

Trainer's tip

The exercise will be better performed if the vegetation on the ground is removed first.

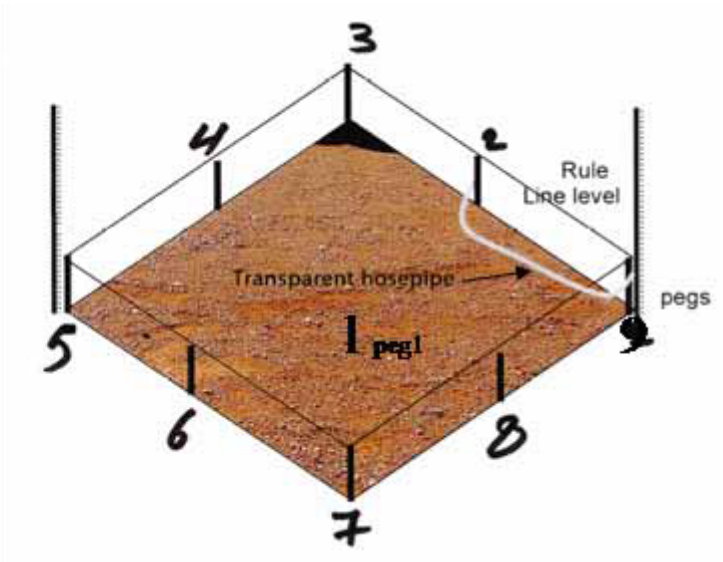

Annex 16 - Bricklaying exercise on good bonding and joint sizes

What needs to be prepared before the exercise

1. Organize enough bricks (20 per group), cement, and sand.
2. Organize bricklaying tools for each group.

The exercise needs to be conducted in two parts! There need to be a minimum of 3 days between part 1 and part 2 of the exercise!

Step-by-step implementation of practical

1. Facilitator explains how the test works: the participants will be divided in 6 groups, and each group will do some different bricklaying; afterwards, the strength of each wall will be tested.
2. Facilitator divides participants into 6 groups.
3. Each group gets 20 pieces of burnt bricks to lay 4 rows of 5 bricks, as well as cement, sand, and water to produce mortar.
4. Each group mixes mortart at the rate of 1 part cement and 3 parts sand.
5. Groups 1 to 3 shall mix rather dry mortar. The amount of water added needs to be strictly controlled (not more than one-third of the weight of cement plus sand).
6. Groups 4 to 6 shall mix rather wet mortar by using more water as indicated above.
7. Each group gets directions on what type of bonding they shall use and does the bricklaying accordingly:
   Groups 1 and 4: all joints are straight/vertical above each other.
   Groups 2 and 5: all bricks overlap each other by 50 percent; that means the joints are in the middle of the brick below and above, and each joint is maximum 1 cm thick.
   Groups 3 and 6: as group 2, but with 3 cm-thick joints.
8. The mortar normally needs to dry for 7 days; for the purposes of this exercise, the second part can be conducted after 3 days.
9. Facilitator will demonstrate the different strengths of the walls:
   Group 1: wall is unstable due to bad bonding.
   Group 2: wall is strong due to good bonding and thin joints.
   Group 3: wall is weaker than wall of group 2 due to thicker joints.
   Group 4: wall is even weaker than wall of group 1 due to wet mortar.
   Group 5: wall is weaker than wall of group 2 due to wet mortar.
   Group 6: wall is weaker than wall of group 3 due to wet mortar.
10. Facilitator highlights the importance of good bonding, thin joints, and dry mortar!

STRECTHER BOND

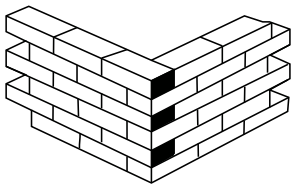

ELEVATION

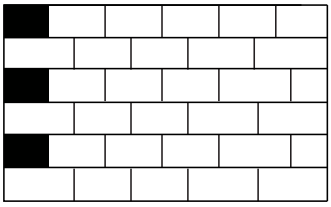

1ST COURSE

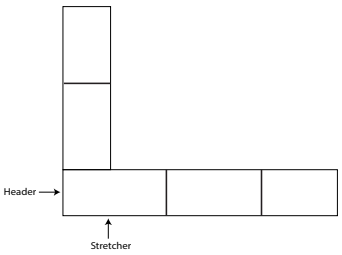

2ND COURSE

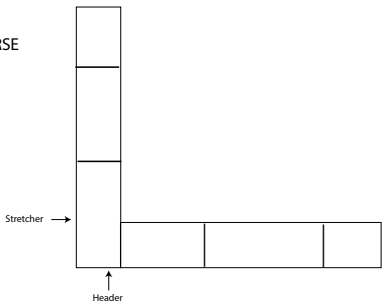

FLEMISH BOND

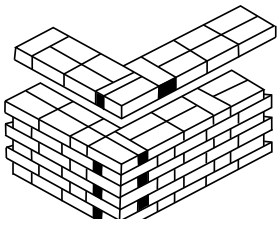

ENGLISH BOND

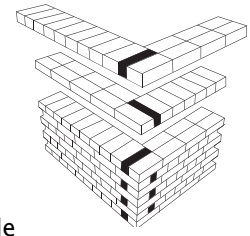

Trainer's tip

The exercise need to be conducted on stable ground – for instance, inside or on a concrete base or on asphalt, etc., but not on grass or loose soil.

Annex 17 - Making safe and strong scaffolds

What needs to be prepared before the exercise

1. Organize the following materials:
   - A minimum of 6 pieces of timber 100 mm x 75 mm x 4 m
   - 8 pieces of timber 40 mm x 80 mm x 4 m
   - 1 kg of 10 cm nails
   - 3 wooden planks 40 mm x 200 mm x 4 m
   - 1 carpenter's hammer, 1 carpenter's saw, 1 spirit level, 1 tape measure 3 m long
   - A round section wood of 100 mm of diameter can also be used
2. Prepare a proper surface, with flat and compacted soil.

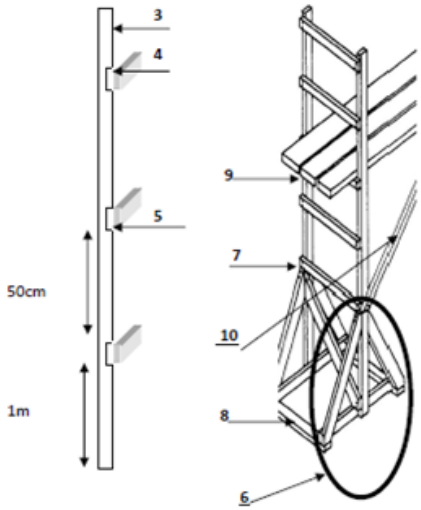

Step-by-step implementation of practical

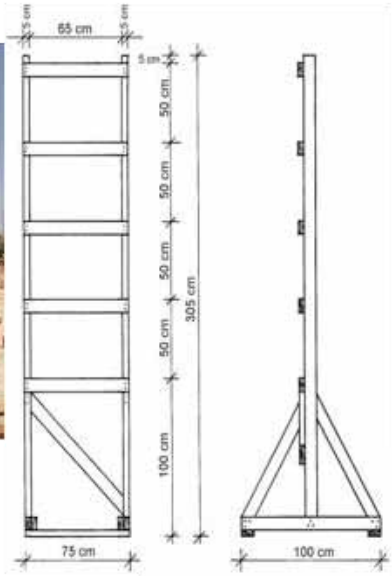

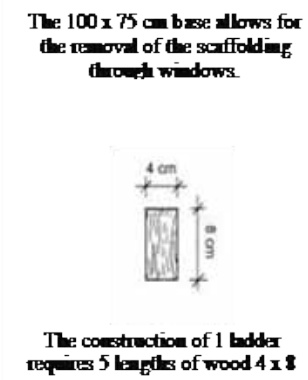

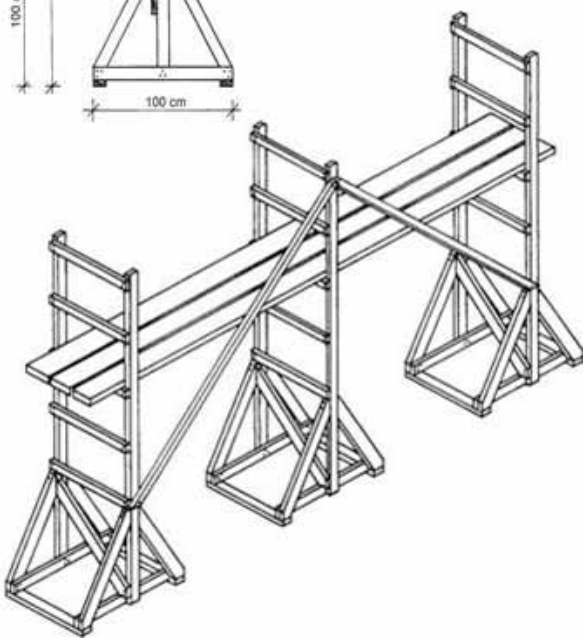

1. The facilitator explains to the participants in the classroom, using the attached pictures, how to make safe and strong scaffolds.
2. He then takes the participants outside to the courtyard or garden next to the classroom and demonstrates step by step how to make scaffolds following the procedure explained below.
3. On the ground, for the columns, place on 2 vertical sides 2 pieces of timber of 100 mm x 75 mm x 4 m, spaced 75 cm.
4. Then mark the placement of horizontal pieces of timber of 40 mm x 80 mm x 75 cm every 50 cm.
5. Cut with a carpenter's saw the emplacements of the horizontal pieces of timber every 50 cm, to start 1 m from the bottom.
6. For each column, assemble 2 triangles using the 2 pieces of timber of 40 mm x 80 mm x 110 cm for 2 sides and a piece of timber of 40 mm x 80 mm x 100 cm for the base of the triangle.
7. Fix these 2 triangles to each column.
8. Then for more stability, fix the triangles from the bases together using 2 pieces of timber of 40 mm x 80 mm x 75 cm.
9. Place 3 wooden planks of 40 mm x 200 mm x 4 m along and between three columns 2 m high; 1 m should be left for security.
10. Set up the diagonal braces from the bottom of one column to the top of another one.
11. Set up the guardrail behind the scaffold on the top.

Trainer's tip

The exercise is best performed outside on level and soft ground.

Annex 18 - Making a wooden truss with strong joints

What needs to be prepared before the exercise

1. Organize the following materials for 4 groups:
   - A minimum of 12 pieces of timber 100 mm x 25 mm x 4 m, 4 pieces of timber 50 mm x 50 mm x 4 m, 10 metallic pegs 30 cm long, and 2 kg of 8 cm nails.
   - 4 carpenter's hammers, 4 carpenter's saws, 4 building lines (strings), 4 spirit levels, 4 plumb bobs, and 4 tape measures of 5 m.
2. Organize a proper surface, flat and rigid (compacted soil).

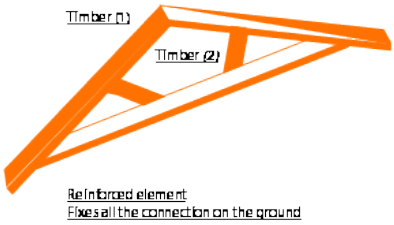

Step-by-step implementation of practical

1. The facilitator explains to the participants in the classroom, using the attached pictures, that a truss is an assembly of long wooden pieces that give the roof slope. The main feature is to be triangulated, which is to be demonstrated step by step using the following procedure.
2. Facilitator divides participants into four groups of four.
3. Each group: prepare your pieces of timber and carpenter tools.
4. Each group: on a flat surface on the ground, draw the perimeter of the truss using the string, starting from the lower side of the tie beam, then marking the ridge and the external side of the rafters. End by drawing the inner elements.
5. Place timber along the twines and overlap elements at crossing points.
6. Mark by pencil the cuts needed.
7. Cut with a carpenter's saw.
8. Set up the truss by nailing or bolting.
9. For more security in a windy environment, it is better to reinforce every angle with a metal or wooden piece, jointed with two or three elements crossing.

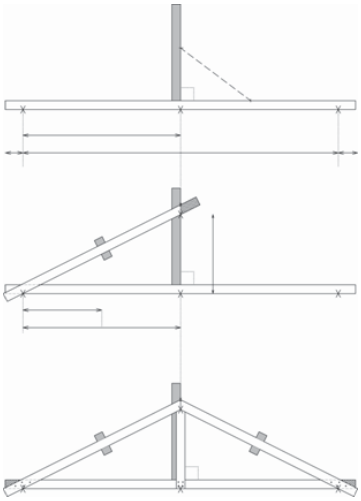

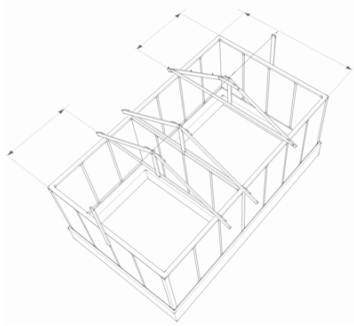

Trainer's tip

The exercise is best performed outside and under a roof, when it's hot or raining.
The design of the truss must be done full scale on a flat surface (e.g. on a ground-floor concrete slab).

CAUTION: Bad nailing may cause cracks in timber elements, compromising the strength of the truss. We strongly recommend the following:

- Select the proper nail length and diameter.
- Space the nails correctly.
- In case a nail exceeds the thickness of the wood, fold the excess portion.
- In case the wood is very hard, before nailing make holes smaller than the nail diameter.

Annex 19 - Site visit: Basic principles and terminologies used in domestic water supply

What needs to be prepared before the exercise

Organize a visit to a construction site when water pipe works are being installed.

Step-by-step implementation of practical

1. The facilitator explains the objectives of the exercise, which are basic principles and terminologies that are used in a domestic water supply, such as a water distribution pipes, storage tanks, and overflow (SECIL training manual p. 47).
2. The facilitator shows and explains piping materials (e.g. pipes, connectors, junctions) for drinking water; never use recycled plastic pipe.
3. The facilitator shows and explains that a duct must be provided for water distribution pipes which cross the foundation or foundation wall.
4. The facilitator explains that, before pouring the slab, one must check and be absolutey sure of the design of the building and the position of sanitation items.
5. The facilitator shows how to properly connect elements to prevent water loss.
6. The facilitator explains that the underground pipes must be bedded and covered in sand (between 20 and 30 cm thick) to protect them from being penetrated by a sharp instrument or object.
7. The facilitator explains that all underground pipe works outside of the building must have a depth between 750 mm and 1,350 mm from the finished ground level.
8. The facilitator explains that a water tank is installed if there is no permanent city network. If the pressure of the water is not enough, the tank should be installed with some precaution:
   - The tank is usually placed on the roof of the building and periodically filled via a pump.
   - A well-dimensioned structure is needed to carry such a weight.
   - A mechanism must be provided to stop any overflow.
9. The facilitator ensures that all the main points are covered; if necessary, he or she can ask a professional to explain more.

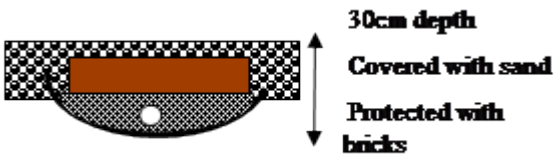

Trainer's tip

The exercise is best performed if the participants can practice.

Annex 20 - Site visit: Basic principles and terminologies used in domestic drainage

What needs to be prepared before the exercise

Organize a visit to a construction site which is installing drainage works.

Step-by-step implementation of practical

1. The facilitator explains the objective of the exercise, which is to understand the safe disposal of used water from kitchen and bathrooms, human waste flushed from water-based toilets, and rain runoff (SECIL training manual p. 48).
2. The facilitator shows and explains that a duct must be provided for drainage pipes which cross the foundation or a foundation wall.
3. Facilitator explains that, before pouring the slab, one must check and be absolutely sure of the design of the building and the position of sanitation items.
4. The facilitator shows and explains piping materials (e.g. pipes, connectors, junctions).
5. The facilitator shows and explains what a siphon looks like and why it is needed.
6. The facilitator shows how to properly connect elements to prevent water leakage.
7. The facilitator explains that the pipe's slope, which must be inclined to ducts and from ducts to manholes, gives a minimum grade of 3 cm/m for horizontal pipes.
8. The facilitator shows and explains the best direction for fitting.
9. The facilitator shows and explains the function of the manhole.
10. The facilitator shows and explains ventilation by extending the sewer ventilation pipe up to the roof.
11. The facilitator explains that if there are no sewer lines, the drain pipe goes to the septic tank. The septic tank is an underground wastewater treatment system box, usually made of concrete or concrete blocks.
12. The facilitator ensures that all the main points are covered; if necessary, he or she can ask a professional to explain more.

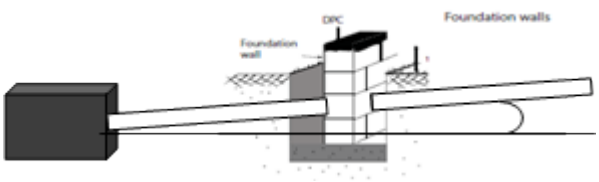

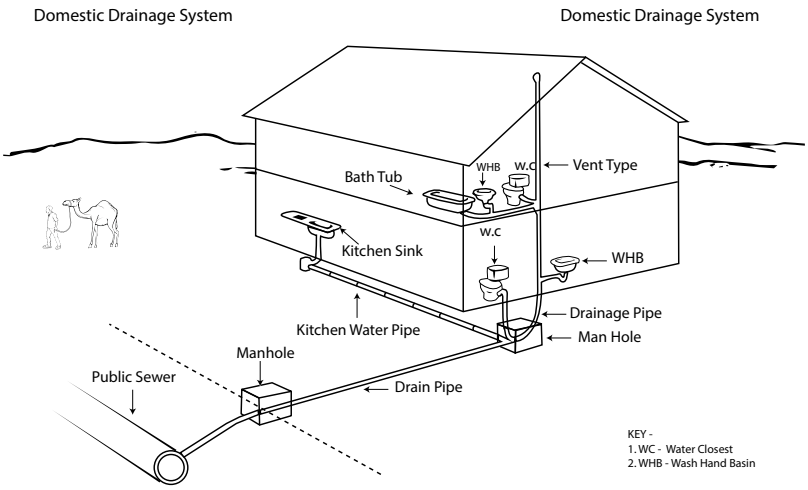

Trainer's tip

The exercise is best performed if the participants can practice.

Annex 21 - Site visit: Basic principles and terminologies used for electrical wiring of a simple house

What needs to be prepared before the exercise

Organize a visit to a construction site while the electrical system is being installed.

Step-by-step implementation of practical

1. The facilitator explains and shows basic principles and terminologies used for the electrical wiring of a simple house (SECIL training manual p. 49, 50).
2. The facilitator shows and explains that a duct must be provided for an electric cable which crosses the foundation or foundation wall.
3. The facilitator explains and shows that the distribution of the electricity in the building is done through a consumer unit. The consumer unit has several cables which form the circuits for lights and other electrical appliances.
4. The facilitator explains and shows that each wiring is protected by a fuse, which has a fixed value (5, 10, 20, 30 amp) matched to the expected current circuit.
5. The facilitator explains and shows that an ordinary power socket requires 15 amp. It is advisable not to install more than 5–6 sockets on the same ring with a 20–amp fuse.
6. The facilitator ensures that all the main points are covered, and if necessary he or she can ask a professional to explain more.

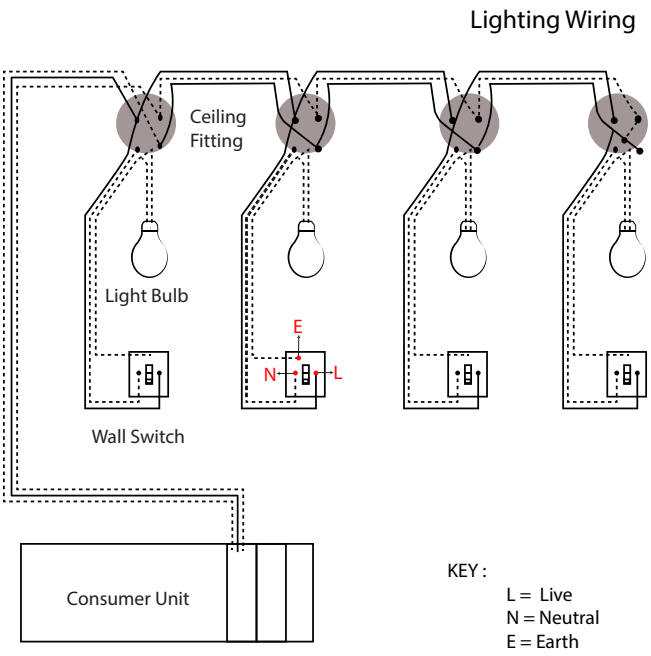

Trainer's tip

WARNING: A qualified electrician is required to undertake all the electrical wiring.

Annex 22 - Site visit: Building finishes

What needs to be prepared before the exercise

1. Organize 200 l of sand, 60 l of cement, 200 l of water, 2 m² of tiles, and 20 burnt bricks or 2 m² of flat stones.
2. Organize mortar-mixing tools (4 shovels, 4 wheelbarrows, 1 watering can, and 4 buckets).
3. Organize 4 trowels, 4 tape measures, 4 spirit levels, and 4 building lines (strings).
4. Organize a proper place for mixing (preferably a concrete base). Alternatively, create a clean base by using plywood or some old metal sheets. (Never mix mortar direct on the ground.)
5. Organize 100 l of clay soil for earth plaster, for using inside the building.

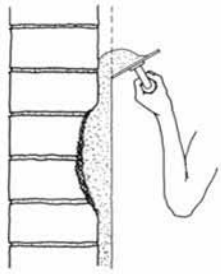

Step-by-step implementation of practical

1. Facilitator explains the role of finishes and how they serve both a decorative and protective function, and prolong the life of the building. Different types of finishes are applied to different parts of a building. Some of the commonly used finishes are introduced in this exercise.
2. The participants will be divided into four groups of four.
3. Each group will start with a type of finishing, but everybody should practice all the examples.
4. Each group gets 1 shovel, 1 trowel, 1 spirit level, and 1 building line, as well as 15 l cement, 50 l sand, and water to produce the cement mortar explained below.
5. Before starting, all the relevant building parts must be moistened with a watering can.
6. Each group gets directions on what type of finishing they shall use and does it accordingly.
7. Plastering for groups 1 and 2: they mix 10 l of cement, 40 l of sand, and 5 liter of water, then apply the mortar with a trowel, with more or less 1 cm of thickness.
   - Each 1 m² to shape the surface using a right metallic or wood profile of 1.5 m.
   - Plastering must be humidifed like concrete for a week.
8. Concrete floor finishing for groups 3 and 4: they can apply that mortar (same as the last two groups) in the same way on the floor, with at least 3-cm thickness to provide a smooth, hard-wearing, and even surface.
9. Floor finishing with tiles for groups 5 and 6:
   - They prepare dry cement mortar with a water-cement ratio of 1 to 3.
   - They apply the dry mortar and use a straight metallic or wooden profile of 1.5 m length and a spirit level to level the mortar.
   - They lay the tiles on the mortar.
   - When the laying is finished in a room, jointing is applied with a liquid mixture of 1 part cement to 2 parts water using a broom; the surface must be cleaned with a cloth after 30 minutes.
10. For outside the building, burned bricks or flat stones can be used instead of tiles.
11. Facilitator explains the advantages of each type of finishing:
    - The cement mortar is very easy to apply on the floor.
    - The tile is more expensive and needs a qualified worker.
    - Earth plaster is very economical and easy to apply, at least for inside the building.
    - External pavements help to keep the building clean and drain away streaming water.

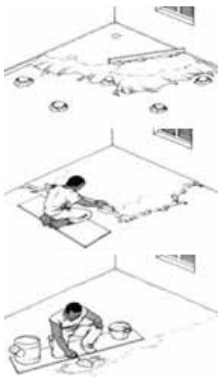

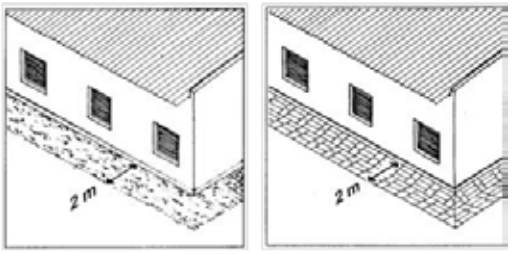

Middle: Internal flooring.
Bottom: External pavement.
Using round stones to surround the building helps to drain water.

Trainer's tip

This test is best performed when all the participants practice all types of finishing.

Annex 23 - Site visit: Snag list

What needs to be prepared before the exercise

Step-by-step implementation of practical

Facilitator plays client/building owner, who identifies shortcomings and missing points. Participants discuss the 'problem' and what needs to be done to satisfy him/her. The facilitator wraps up and explain issues around each item.

Trainer's tip

Annex 24 - Quiz to assess knowledge level

Please answer the questions.

1. What is the main cause of the deterioration of cement quality?

Humidity. Cement should be stored in a well-protected environment from moisture or rain. Cement will harden once it gets in contact with water, losing its strength.

2. What is the main impact of salt in the concrete mixture?

Salt attracts and retains moisture. In addition, the salt content in the mixture will produce a whitish powder of efflorescence, which discolours surfaces, giving rise to aesthetic issues. Moreover, in the case of reinforced concrete, salts attack steel bars, compromising strength and durability.

3. What should be checked when the 3, 4, 5 method is used for setting out a rectangular building?

To verify that this process has been done accurately, the diagonals of the building are checked to see if they are equal. If they are, then the exercise is a success. If not, the process must be repeated until the diagonals are equal.

4. What should be checked initially before using a transparent hosepipe?

Fill water inside the hosepipe till one is sure that no air bubbles are inside all along.

5. Preparation of a good concrete depends on:

a. The quality of the sand and aggregate
b. The quality of cement
c. The cement-water ratio

6. Which property is tested in the concrete slump test?

The water-cement ratio.

7. The value of the slump should be between:

a. 0<st<2 cm (no)
b. 2<st<5 cm (no)
c. 7<st<12 cm (yes - explain it)

8. What does a ratio of 1-4-4 mean in a concrete working mixture?

1 part cement, 4 parts sand, and 4 parts gravel.

9. The quantity of water in a concrete mixture depends on:

a. The quantity of concrete mixture (no)
b. The reinforcement cage (no)
c. The quantity of cement (yes)

10. Why must concrete be poured into the formwork within 30 minutes after adding water?

Because immediately after water has been added to the mix, cement starts setting.

11. Why should the rebar be bent in the reinforced concrete?

Round plain bars need to be hooked at the ends to obtain better adhesion, and therefore create greater strength for the structure. Hooking is not necessary for steel bars with a ribbed surface. Both plain and ribbed rods have to be anchored in the pressure zone of the structure.

12. Where could a round bar be used?

It is used for small reinforcement of concrete, especially transverse reinforcement of beams and columns (frames and ties), for which small diameters are used.

13. How can a levelled column formwork be obtained?

Level the pillar by using the plumb bob and fix it by putting the round section pieces of wood on the four sides of formwork. Fix one end side to the formwork and the other to the soft ground.

14. What should be checked in the beams and the slab-floors formwork?

Pay attention to the resistance of the formwork, particularly for the beams and the slab-floors. It must be taken into consideration that it has to withstand the weight of the concrete (2,200 kg/m^3) as well as the load of a worker.

15. What should be checked for determining soil stability?

The type of soil in terms of its strength and load-bearing capacity, as well as the behaviour of the soil when wet. These aspects are very important and will help the design team to determine the type of foundation.

16. Why must the joints of a truss be reinforced?

For more security in a windy environment, it is better to reinforce every angle with a metal or wooden piece, jointed with two or three elements crossing.

Annex 25 - Evaluation form

Evaluation Questionnaire for Construction Workers

Evaluation rating: 1 = strongly disagree 2=disagree 3=agree somewhat 4=agree 5=strongly agree

A. Objectives and expectations met

1. The training was as I expected it to be.
1 ☐ 2 ☐ 3 ☐ 4 ☐ 5 ☐

2. I have learned something new.
1 ☐ 2 ☐ 3 ☐ 4 ☐ 5 ☐

3. I have learned something useful for my work.
1 ☐ 2 ☐ 3 ☐ 4 ☐ 5 ☐

B. Training content, venue, and training materials

1. The training was well prepared.
1 ☐ 2 ☐ 3 ☐ 4 ☐ 5 ☐

2. The classroom used for some training sessions was appropriate.
1 ☐ 2 ☐ 3 ☐ 4 ☐ 5 ☐

3. The construction sites were well selected.
1 ☐ 2 ☐ 3 ☐ 4 ☐ 5 ☐

4. I liked to have some classes inside and some outside.
1 ☐ 2 ☐ 3 ☐ 4 ☐ 5 ☐

5. The manual is easy to understand.
1 ☐ 2 ☐ 3 ☐ 4 ☐ 5 ☐

6. The manual is useful for my work.
1 ☐ 2 ☐ 3 ☐ 4 ☐ 5 ☐

7. I will share the manual with my colleagues.
1 ☐ 2 ☐ 3 ☐ 4 ☐ 5 ☐

C. Facilitation

1. I understood the facilitator clearly.
1 ☐ 2 ☐ 3 ☐ 4 ☐ 5 ☐

2. I had enough opportunities to express my views and ask questions.
1 ☐ 2 ☐ 3 ☐ 4 ☐ 5 ☐

3. The teaching environment was friendly.
1 ☐ 2 ☐ 3 ☐ 4 ☐ 5 ☐

4. The practical exercises were well prepared.
1 ☐ 2 ☐ 3 ☐ 4 ☐ 5 ☐

5. The practical exercises will help me in my work.
1 ☐ 2 ☐ 3 ☐ 4 ☐ 5 ☐

D. Perceived impact

1. What I have learned from this training will help me build better buildings.
1 ☐ 2 ☐ 3 ☐ 4 ☐ 5 ☐

2. I will tell my colleagues and supervisors about this training.
1 ☐ 2 ☐ 3 ☐ 4 ☐ 5 ☐

3. Overall, I am very satisfied with the training.
1 ☐ 2 ☐ 3 ☐ 4 ☐ 5 ☐

E. Recommendations for future trainings

1. I would like to have more practical exercises.
1 ☐ 2 ☐ 3 ☐ 4 ☐ 5 ☐

2. I would like to have more classroom sessions.
1 ☐ 2 ☐ 3 ☐ 4 ☐ 5 ☐

How do you intend to apply what you have learned in the course?

Kindly list other sessions or topics you think should be included in future trainings.

Other comments and suggestions:

Thank you!

HOW TO CONDUCT A TRAINING FOR CONSTRUCTION WORKERS

Notes for facilitators and trainers

Lorem ipsum dolor sit amet, consectetuer adipiscing elit. Aenean commodo ligula eget dolor. Aenean massa. Cum sociis natoque penatibus et magnis dis parturient montes, nascetur ridiculus mus. Donec quam felis, ultricies nec, pellentesque eu, pretium quis, sem. Nulla consequat massa quis enim. Donec pede justo, fringilla vel, aliquet nec, vulputate eget, arcu. In enim justo, rhoncus ut, imperdiet a, venenatis vitae, justo. Nullam dictum felis eu pede mollis pretium. Integer tincidunt. Cras dapibus. Vivamus elementum semper nisi. Aenean vulputate eleifend tellus. Aenean leo ligula, porttitor eu, consequat vitae, eleifend ac, enim. Aliquam lorem ante, dapibus in, viverra quis, feugiat a, tellus. Phasellus viverra nulla ut metus varius laoreet. Quisque rutrum. Aenean imperdiet. Etiam ultricies nisi vel augue. Curabitur ullamcorper ultricies nisi. Nam eget dui.

Etiam rhoncus. Maecenas tempus, tellus eget condimentum rhoncus, sem quam semper libero, sit amet adipiscing sem neque sed ipsum. Nam quam nunc, blandit vel, luctus pulvinar, hendrerit id, lorem. Maecenas nec odio et ante tincidunt tempus. Donec vitae sapien ut libero venenatis faucibus. Nullam quis ante. Etiam sit amet orci eget eros faucibus tincidunt. Duis leo. Sed fringilla mauris sit amet nibh. Donec sodales sagittis magna. Sed consequat, leo eget bibendum sodales, augue velit cursus nunc, quis gravida magna mi a libero. Fusce vulputate eleifend sapien. Vestibulum purus quam, scelerisque ut, mollis sed, nonummy id, metus. Nullam accumsan lorem in dui. Cras ultricies mi eu turpis hendrerit fringilla. Vestibulum ante ipsum primis in faucibus orci luctus et ultrices posuere cubilia Curae; In ac dui quis mi consectetuer lacinia.

RAJO

HS/073/12E
ISBN: 978-92-1-132488-4

UN-Habitat Somalia Programme
Tel. +254 20 7625030
un-habitat.som@unhabitat.org
www.unhabitat.org/somaliregion